СХЕМА АВТОМАТИЗАЦИИ №2

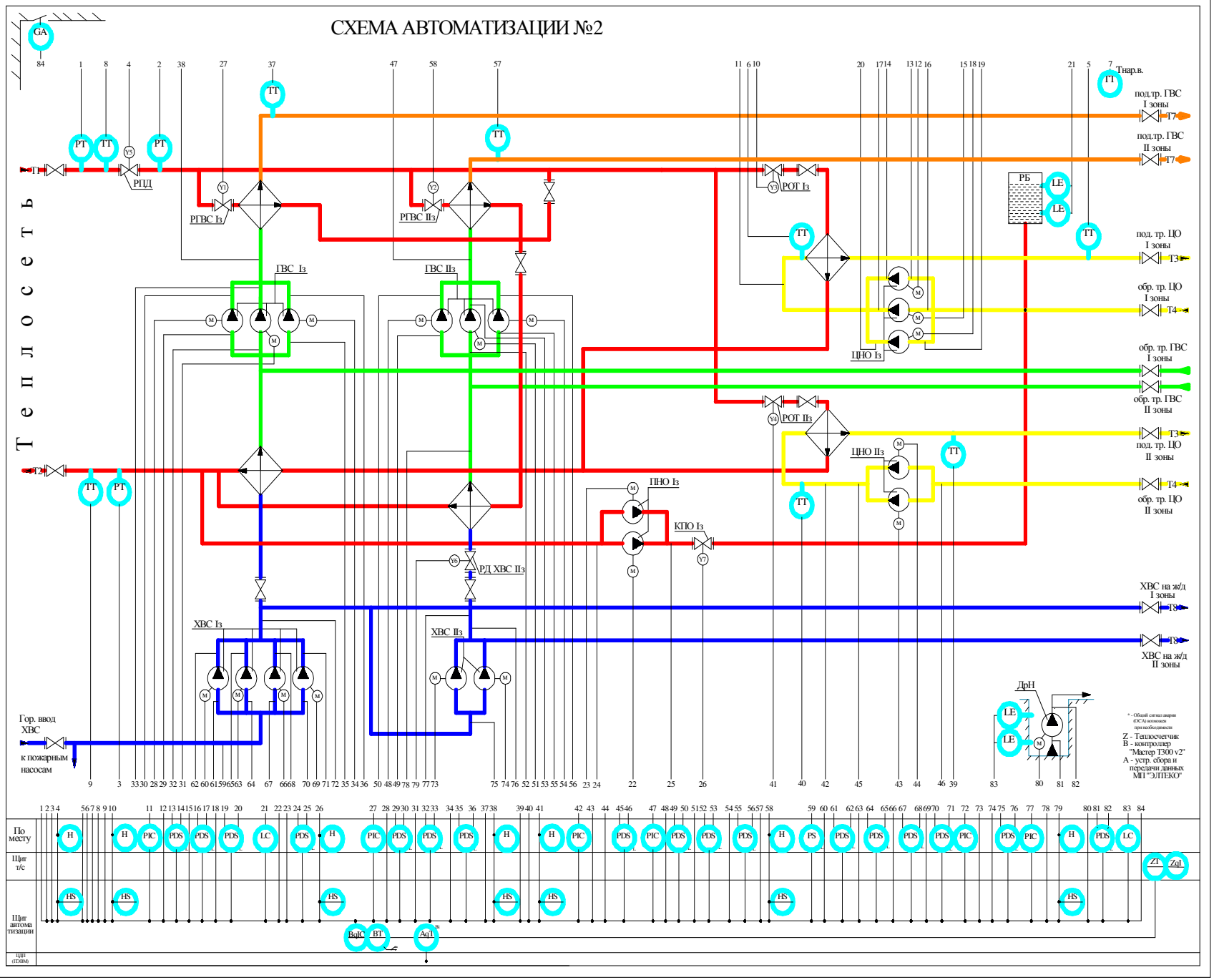

Created by trial version, http://www.8848soft.com